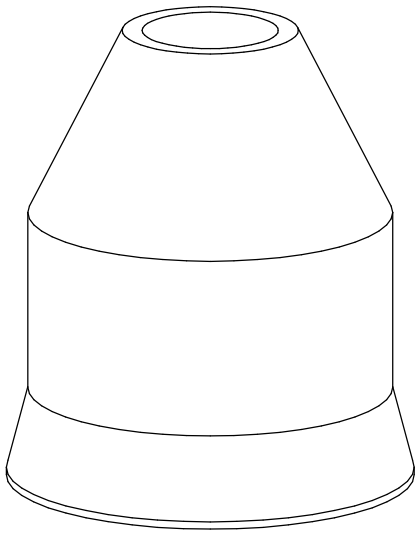

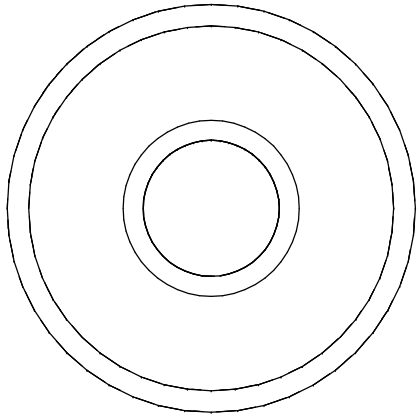

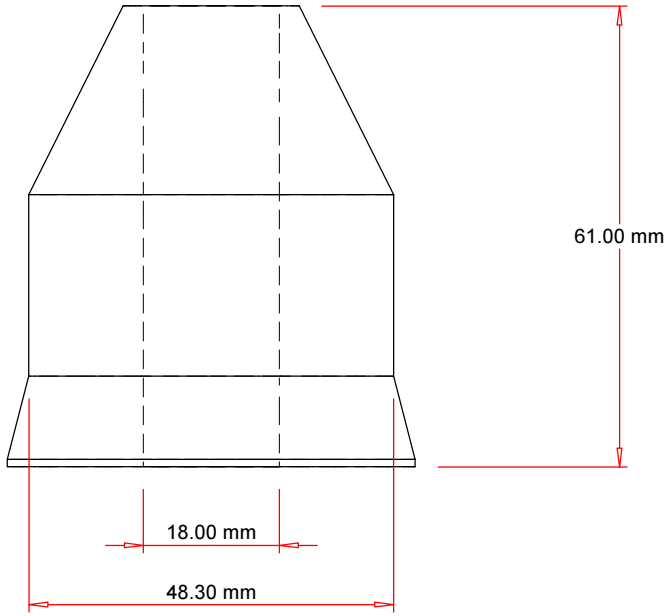

No.	REVISION	BY	CHKD	DATE
0	ORIGINAL ISSUE	P.S.		

DESCRIPTION

BUMPSTOP BS007, PEUGEOT 205/309 GTi REAR

© COPYRIGHT. ALL RIGHTS RESERVED
THIS DRAWING IS STRICTLY CONFIDENTIAL AND MUST NOT BE COPIED, REPRODUCED OR ADAPTED, NOR MAY ARTICLES BE MANUFACTURED IN ACCORDANCE WITH THE DRAWING WITHOUT PRIOR WRITTEN PERMISSION OF POWERFLEX.

POWERFLEX

MATERIAL: POLYURETHANE SHORE A 70

DRAWING No.: BS007

REV: 0